# Parts Catalog



**G10**

# Slicing Machine

## Model: G10

5/15/23 Rev. H, Serial Number 403490 and Up
IMPORTANT!
TO EXPEDITE SHIPMENT OF PARTS, ALWAYS SPECIFY MODEL, REV,
PART NUMBER, AND SERIAL NUMBER OF UNIT.


## GLOBE FOOD EQUIPMENT COMPANY

2215 East River Road
Dayton, Ohio 45439

**Parts Department**
Toll Free 1-800-745-6238 · Fax (937) 290-0585
E-Mail: info@globefoodequip.com
Website: www.globefoodequip.com

Not for resale

**© Globe Food Equipment Company, 2023**

# Table of Contents


| Description | Page |
| --- | --- |
| G10 Base Components | 4 |
| G10 Chute Components | 6 |
| G10 Knife and Sharpener Components | 8 |
| G10 Electrical Components | 10 |
| G10 Wiring Diagram - 115, 50_60 Hz, 1PH SN 403490 and Up | 12 |

# G10 Base Components

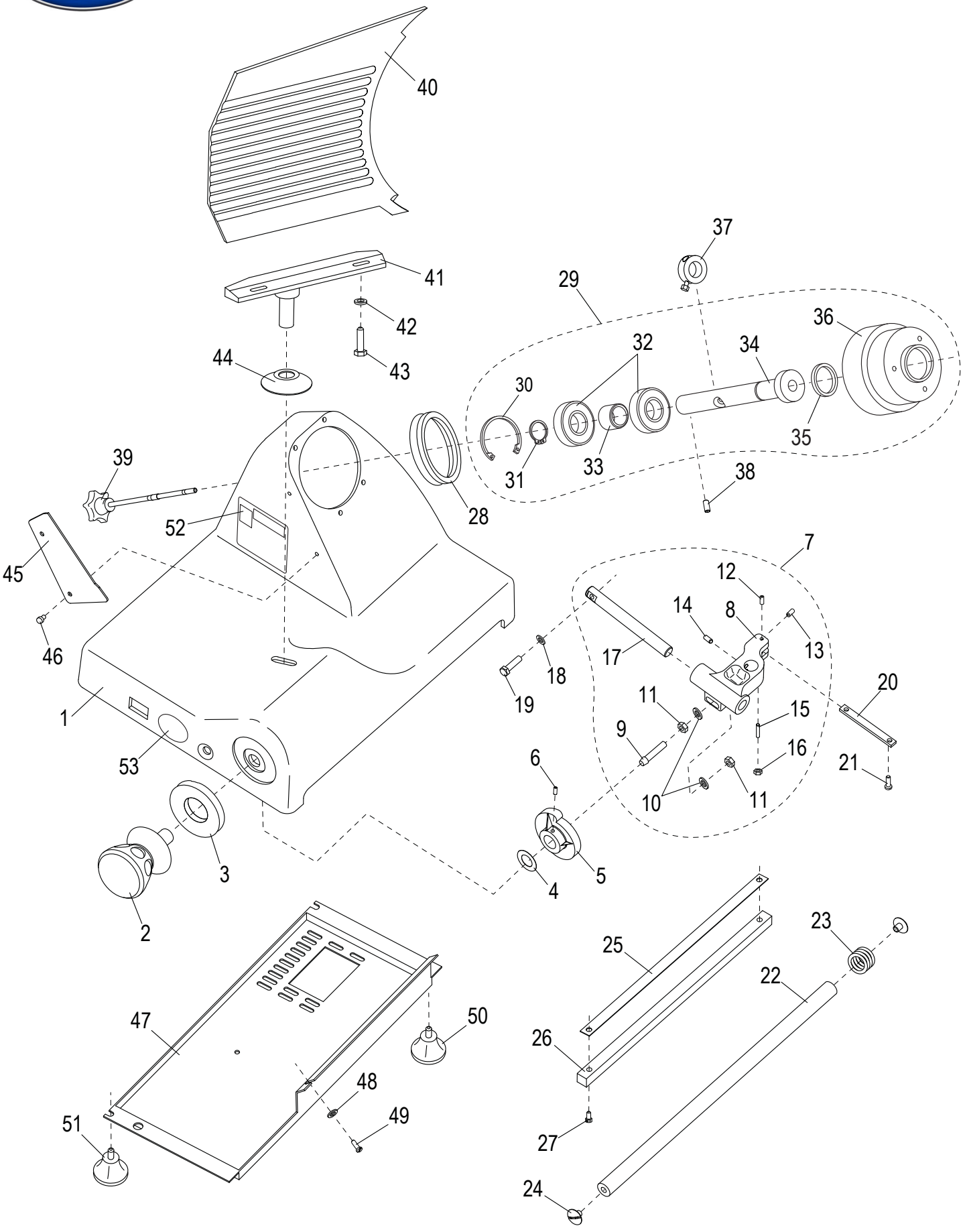




© Globe Food Equipment Company

# G10 Base Components

| Item | Part Number | Description | Qty | Serial Number |
|---|---|---|---|---|
| 1 | | Slicer Base | 1 | |
| 2 | M00208 | Table Adjustment Knob | 1 | |
| 3 | M00211 | Ferrule | 1 | |
| 4 | M003 | Wave Washer | 1 | |
| 5 | M004 | Cam | 1 | |
| 6 | H00181 | Set Screw | 2 | |
| 7 | M00212 | Table Slide Assembly (Incl. items 8-17) | 1 | |
| 8 | | Table Slide | 1 | |
| 9 | MCA34 | Threaded Rod | 1 | |
| 10 | M035 | Flat Washer ID 6.5 OD 12 TH 1.5 mm Zinc | 2 | |
| 11 | M034 | Hex Nut M6x1.0 OD 10 mm TH 5 mm Zinc | 2 | |
| 12 | H00182 | Set Screw M5x10 Flat Pt Slotted - Zn | 1 | |
| 13 | H00189 | Cheese Hd Screw M4-0.7x10 Slotted - Zn | 1 | |
| 14 | H00186 | Set Screw M8-1.25x10 Cup Pt. Hex Socket - BO | 2 | |
| 15 | H00187 | Cheese Hd Screw M5-0.8x16 Slotted - Zn | 1 | |
| 16 | X30186 | Hex Nut M5-0.8 OD-8, TH-4mm, Zinc | 1 | |
| 17 | M014 | Table Slide Rod | 1 | |
| 18 | X08101 | Washer M8x16mm Flat | 2 | |
| 19 | H00116 | Hex Head Screw M6-1.0x20 - Zn | 2 | |
| 20 | M016 | Table Slide Plate | 1 | |
| 21 | H00061 | Hex Head Screw M5x10, Zinc | 2 | |
| 22 | MCA26 | Round Slide Rod | 1 | |
| 23 | MCA27 | Spring | 2 | |
| 24 | MCA25 | Screw | 2 | |
| 25 | MCA31/1 | Wear Strip | 1 | |
| 26 | MCA31 | Square Slide Bar | 1 | |
| 27 | H00187 | Cheese Hd Screw M5-0.8x16 Slotted - Zn | 2 | |
| 28 | MGI77/5 | Knife Seal | 1 | |
| 29 | M00280 | Knife Hub Assembly (Incl. items 30-36) | 1 | |
| 30 | H00053 | Retaining Ring, Internal | 1 | |
| 31 | H00194 | Retaining Ring, External | 1 | |
| 32 | MCA12/3 | Bearing (6202 RS) | 2 | |
| 33 | M00237 | Spacer | 1 | |
| 34 | | Shaft, Knife Hub - Switch Collar | 1 | |
| 35 | | Oil Seal | 1 | |
| 36 | | Pulley, Knife Hub | 1 | |
| 37 | | Microswitch Collar | 1 | |
| 38 | H00183 | Set Screw M5x10 Cup Pt. Hex Socket - BO | 1 | |
| 39 | M00225 | Knife Cover Release Knob | 1 | |
| 40 | M00221 | Table | 1 | |
| 41 | M00217 | Table Support | 1 | |
| 42 | M035 | Flat Washer ID 6.5 OD 12 TH 1.5 mm Zinc | 2 | |
| 43 | H00116 | Hex Head Screw M6-1.0x20 - Zn | 2 | |
| 44 | M00218 | Hole Cover | 1 | |
| 45 | M097 | Slice Deflector | 1 | |
| 46 | MCC23 | Thumb Screw | 2 | |
| 47 | M00240 | Bottom Cover | 1 | |
| 48 | H00063 | Flat Washer, M5, Zinc | 1 | |
| 49 | H00061 | Hex Head Screw M5x10, Zinc | 1 | |
| 50 | MCA24/1 | Back Foot | 2 | |
| 51 | M00220 | Front Foot | 2 | |
| 52 | M91022 | Warning Label | 1 | |
| 53 | M91021 | Globe Logo | 1 | |



© Globe Food Equipment Company

# G10 Chute Components

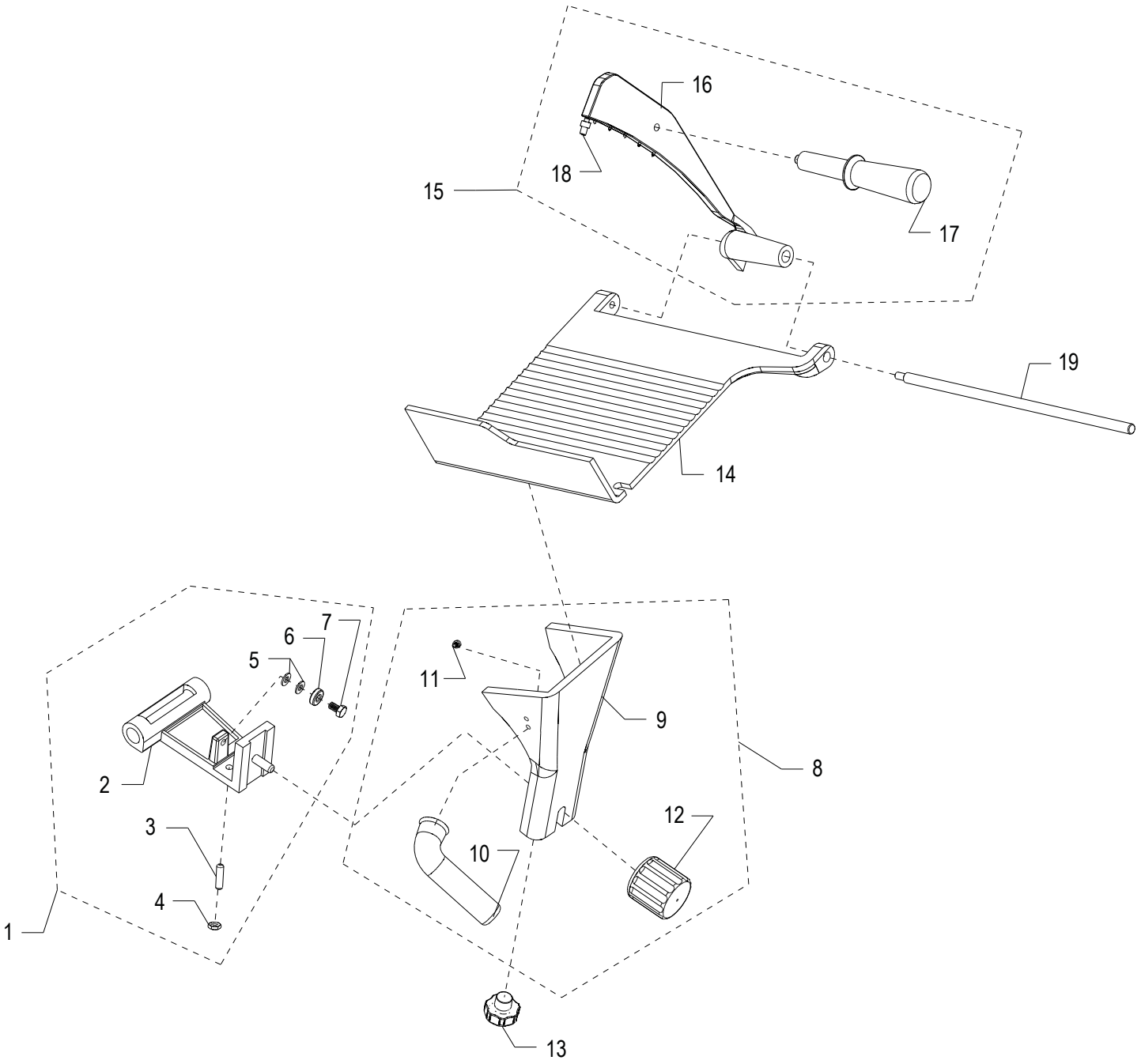




© Globe Food Equipment Company

# G10 Chute Components

| Item | Part Number | Description | Qty | Serial Number |
|---|---|---|---|---|
| 1 | MC006 | Chute Slide Assembly (Incl. items 2-7) | 1 | |
| 2 | | Chute Slide | 1 | |
| 3 | M053 | Brass Stud | 1 | |
| 4 | H00192 | Hex Nut M8-1.25,13mm Width,4 mm Height-Zn | 1 | |
| 5 | M035 | Flat Washer ID 6.5 OD 12 TH 1.5 mm Zinc | 2 | |
| 6 | MCA29 | Bearing (626 2RS) | 1 | |
| 7 | H00043 | Hex Head Screw M6 x 25 mm- Zn | 1 | |
| 8 | M00273 | Chute Support Assembly (Incl. items 9-11) | 1 | |
| 9 | | Chute Support | 1 | |
| 10 | M067 | Chute Support Handle | 1 | |
| 11 | H00156 | Ext. Hex Hd M6x1.0x12 mm Screw Zinc 8.8 | 2 | |
| 12 | M00253 | Chute Support Knob | 1 | |
| 13 | M00284 | Chute Release Knob | 1 | |
| 14 | M01096 | Chute | 1 | 402269 - 403489 |
| 14 | M02729 | Chute | 1 | 403490 -> |
| 15 | M01098 | End Weight Assembly (Incl. items 16-18) | 1 | 402269 - 403489 |
| 15 | M02736 | End Weight Assembly (Incl. items 16-18) | 1 | 403490 -> |
| 16 | | End Weight | 1 | |
| 17 | M00257 | End Weight Handle | 1 | |
| 18 | M01070 | Bumper | 1 | 402268 - 403489 |
| 18 | M02731 | Bumper | 1 | 403490 -> |
| 19 | M01095 | End Weight Rod | 1 | |



© Globe Food Equipment Company

# G10 Knife and Sharpener Components

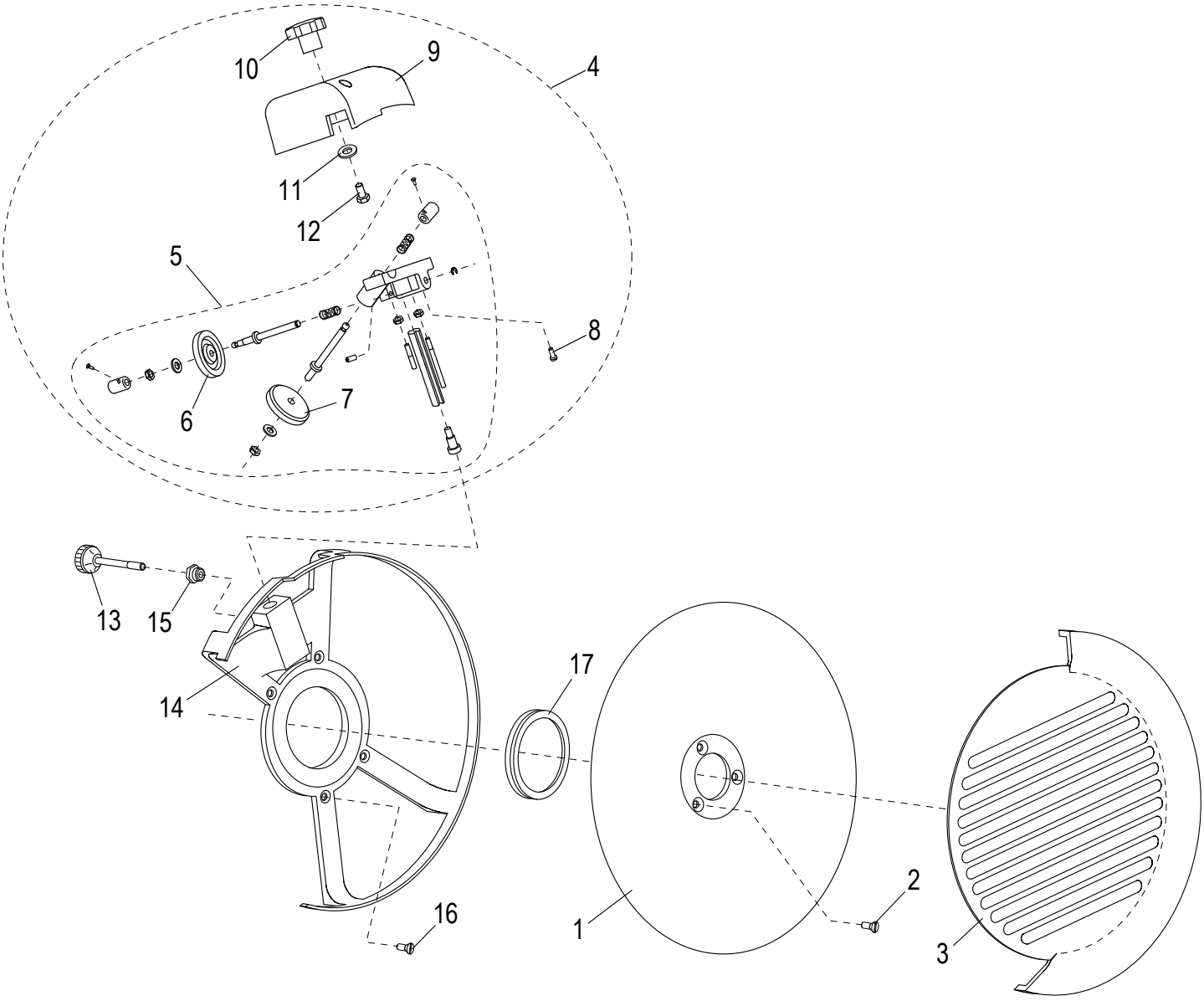




© Globe Food Equipment Company

# G10 Knife and Sharpener Components

| Item | Part Number | Description | Qty | Serial Number |
|---|---|---|---|---|
| 1 | MCB13 | Knife | 1 | |
| 2 | 56-A | Flat HD Screw- Slotted, ZINC-8.8 | 3 | |
| 3 | M00327 | Knife Cover | 1 | |
| 4 | M377 | Complete Sharpener Assembly (Incl. items 5-12) | 1 | |
| 5 | MC017 | Sharpener Assembly | 1 | |
| 6 | M092 | Deburring Stone (Incl. items 6-7) | 1 | |
| 7 | MCC17 | Sharpening Stone | 1 | |
| 8 | H00187 | Cheese Hd Screw M5-0.8x16 Slotted - Zn | 2 | |
| 9 | M074 | Sharpener Cover | 1 | |
| 10 | M075 | Sharpener Cover Knob | 1 | |
| 11 | M035 | Flat Washer ID 6.5 OD 12 TH 1.5 mm Zinc | 1 | |
| 12 | H00197 | Hex Hd Screw M6x15 - Zn | 1 | |
| 13 | M096 | Sharpener Release Knob | 1 | |
| 14 | MCRB14/1 | Rim Guard | 1 | |
| 15 | M045 | Insert | 1 | |
| 16 | H00435 | Screw | 4 | |
| 17 | MGI77/5 | Knife Seal | 1 | |



© Globe Food Equipment Company

# G10 Electrical Components

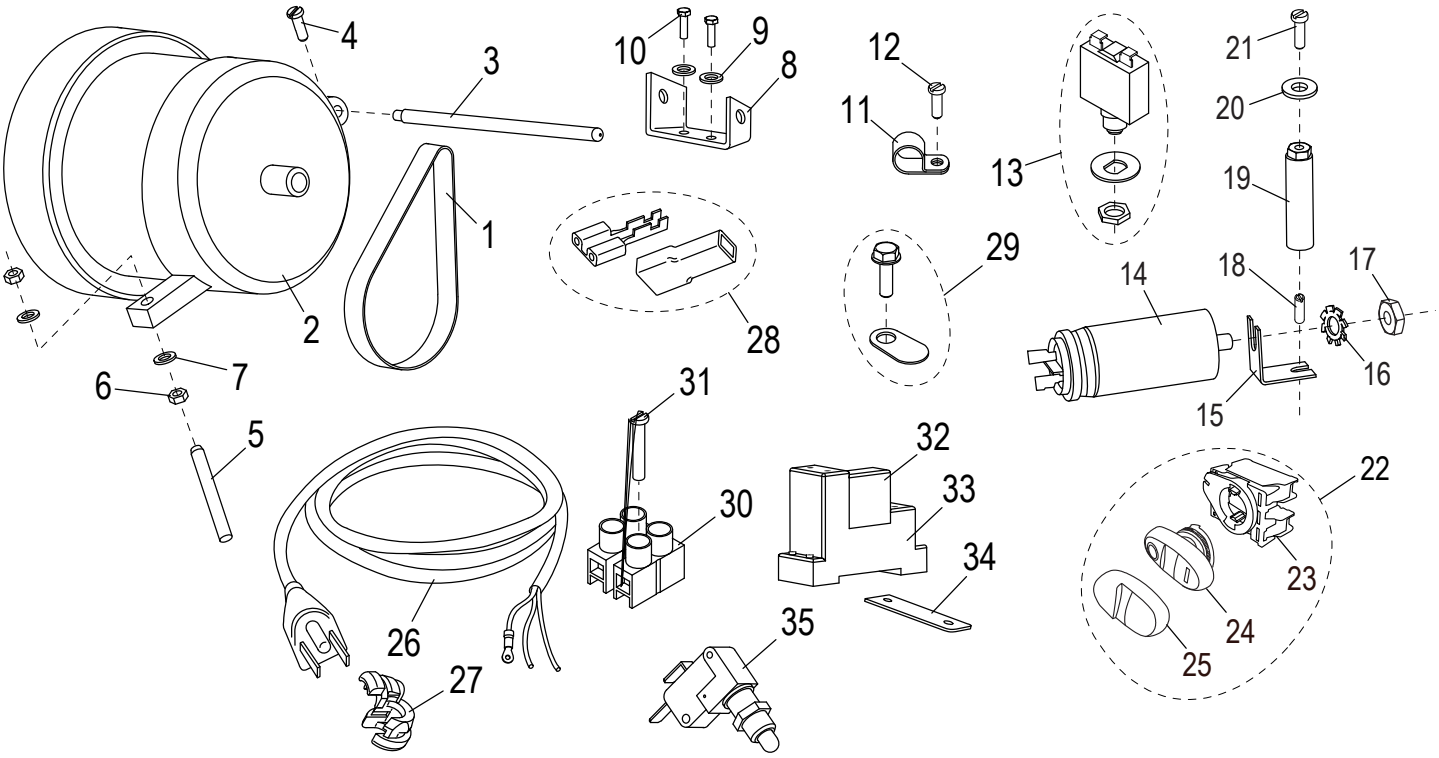




© Globe Food Equipment Company

# G10 Electrical Components

| Item | Part Number | Description | Qty | Serial Number |
|---|---|---|---|---|
| 1 | MCB51 | Belt | 1 | |
| 2 | MCL43/2 | Motor (115V/60HZ/2.5A) | 1 | |
| 3 | M031 | Pin | 1 | |
| 4 | H00189 | Cheese Hd Screw M4-0.7x10 Slotted - Zn | 1 | |
| 5 | M033 | Threaded Rod | 1 | |
| 6 | M034 | Hex Nut M6x1.0 OD 10 mm TH 5 mm Zinc | 2 | |
| 7 | M035 | Flat Washer ID 6.5 OD 12 TH 1.5 mm Zinc | 2 | |
| 8 | M00355 | Mounting Bracket | 1 | |
| 9 | H00063 | Flat Washer, M5, Zinc | 1 | |
| 10 | H00354 | Motor Mounting Screw | 2 | |
| 11 | M037 | Cable Clamp | 1 | |
| 12 | H00061 | Hex Head Screw M5x10, Zinc | 1 | |
| 13 | M038 | Reset Switch | 1 | |
| 14 | M039 | Capacitor | 1 | |
| 15 | | Bracket, Capacitor Mounting | 1 | |
| 16 | H00335 | Lock Washer M8, ID-8.4, OD-15, TH-0.8mm Zn | 1 | |
| 17 | H00192 | Hex Nut M8-1.25,13mm Width,4 mm Height-Zn | 1 | |
| 18 | H00188 | Set Screw | 1 | |
| 19 | M00359 | Standoff | 1 | |
| 20 | M035 | Flat Washer ID 6.5 OD 12 TH 1.5 mm Zinc | 1 | |
| 21 | H00061 | Hex Head Screw M5x10, Zinc | 1 | |
| 22 | M02050 | Power Switch Assembly | 1 | 403490 -> |
| 23 | | Contact Assembly | 1 | 403490 -> |
| 24 | M02048 | Switch | 1 | 403490 -> |
| 25 | M02047 | Power Switch Cover | 1 | 403490 -> |
| 26 | M110 | Power Cord | 1 | |
| 27 | M111 | Strain Relief | 1 | |
| 28 | M00233 | Terminal & Insulator | 15 | |
| 29 | M00334 | Ground Screw | 1 | |
| 30 | MB80/2 | Terminal Block w/Screw | 1 | |
| 31 | M029 | Screw | 1 | |
| 32 | MCR75 | Relay | 1 | |
| 33 | MCR76 | Relay Mount | 1 | |
| 34 | M00360 | Mounting Plate | 1 | |
| 35 | M026 | Microswitch | 1 | |



© Globe Food Equipment Company

# G10 Wiring Diagram - 115, 50_60 Hz, 1PH SN 403490 and Up

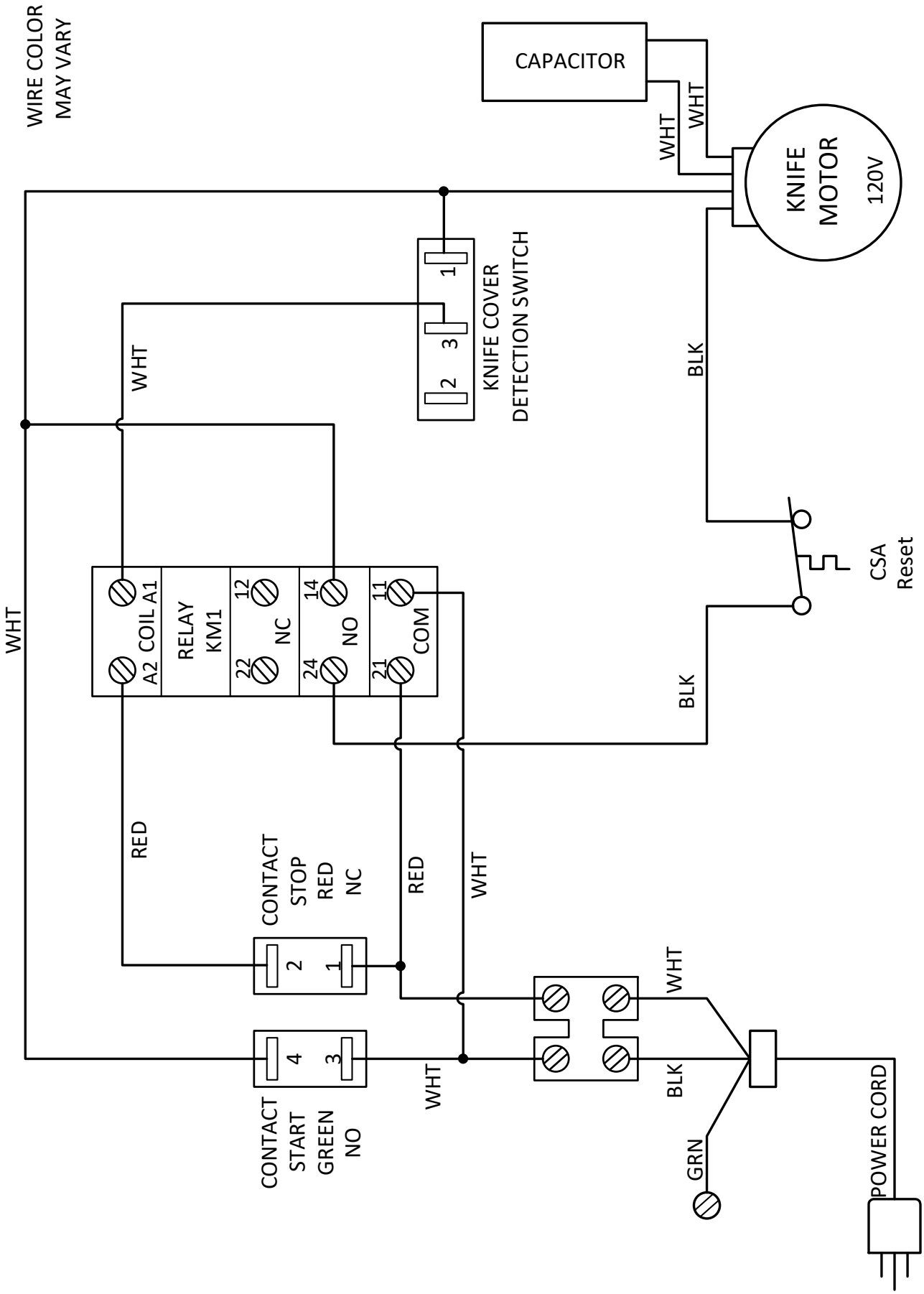




© Globe Food Equipment Company